OpenSourceRouting
www.opensourcerouting.org

OpenSourceRouting
Demonstration
Network Setup

LEAD THE TRANSFORMATION
OPEN NETWORKING SUMMIT 2014
MARCH 3 - 5, 2014
SANTA CLARA CONVENTION CENTER & HYATT

ONS 2014 Demo Setup

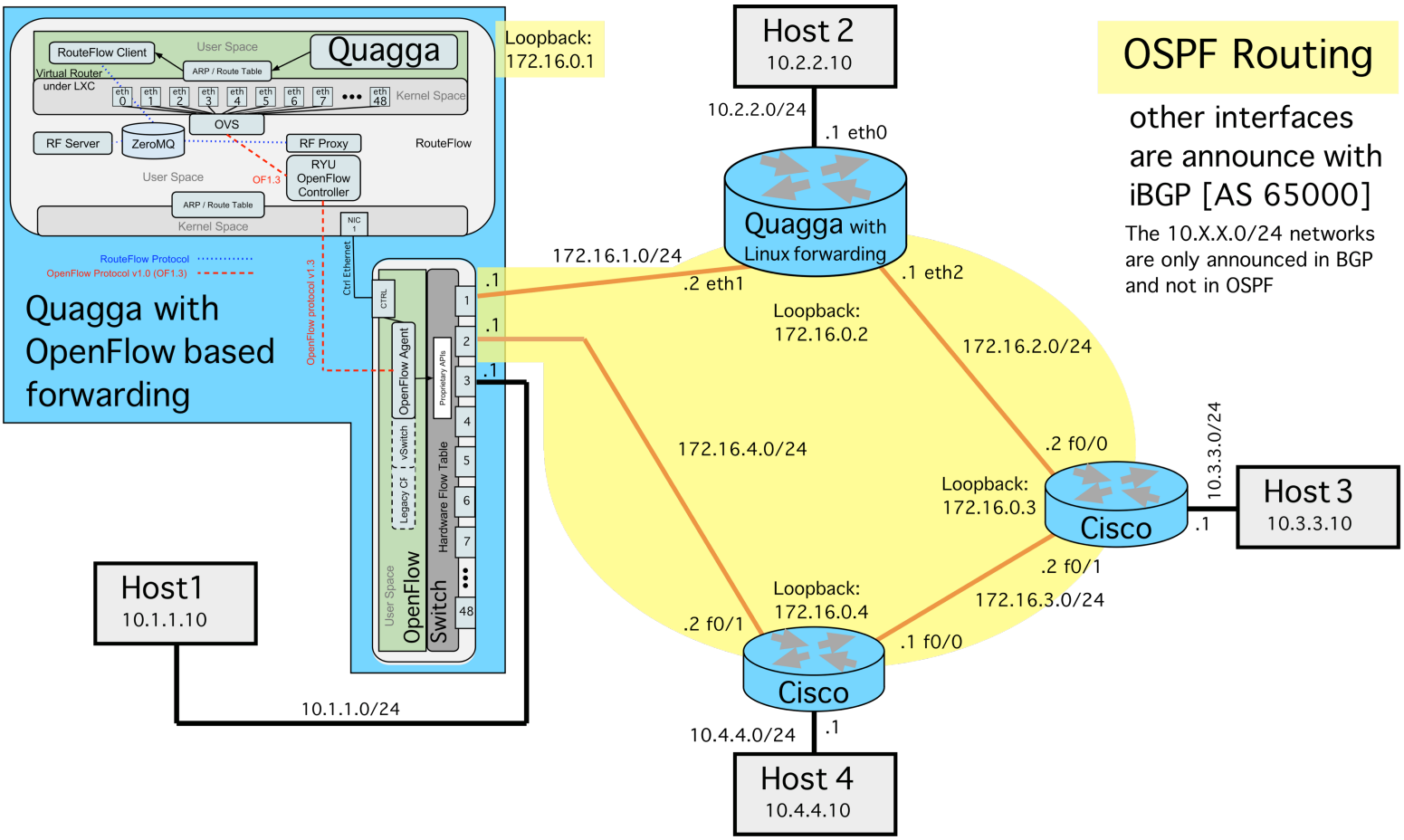

OSPF Routing

other interfaces are announce with iBGP [AS 65000]

The 10.X.X.0/24 networks are only announced in BGP and not in OSPF

Demonstrating Interopability between standard commercial routers, Quagga as a software router and Quagga in a distributed platform

IPv4	IPv6
zebra (Kernel Interface, static routes)	
RIP	RIPng
OSPFv2	OSPFv3
ISIS	
BGP	
Babel	

Other protocols such as MPLS LDP, BFD, OLSR and Multicast Routing are under development or in an unmaintained state

This demonstration shows a fully functional network design featuring **Quagga** running OSPF and BGP: Quagga is shown both as **a pure software router** using the underlining Linux kernel for forwarding on a standard PC and as **a high-end distributed router** with an OpenFlow based switch for forwarding.

About Quagga: Quagga is a routing software suite, providing implementations of OSPFv2, OSPFv3, ISIS, RIP, RIPng and BGP4 for Unix platforms, particularly FreeBSD, Linux, Solaris and NetBSD. Quagga is a fork of GNU Zebra which was developed by Kunihiro Ishiguro. The Quagga tree aims to build a more involved community around Quagga than the current centralized model of GNU Zebra.

Additionally, the Quagga architecture has a rich development library to facilitate the implementation of protocol/client daemons, coherent in configuration and administrative behavior.

For more information about Quagga, go to http://www.quagga.net

OpenSourceRouting

www.opensourcerouting.org

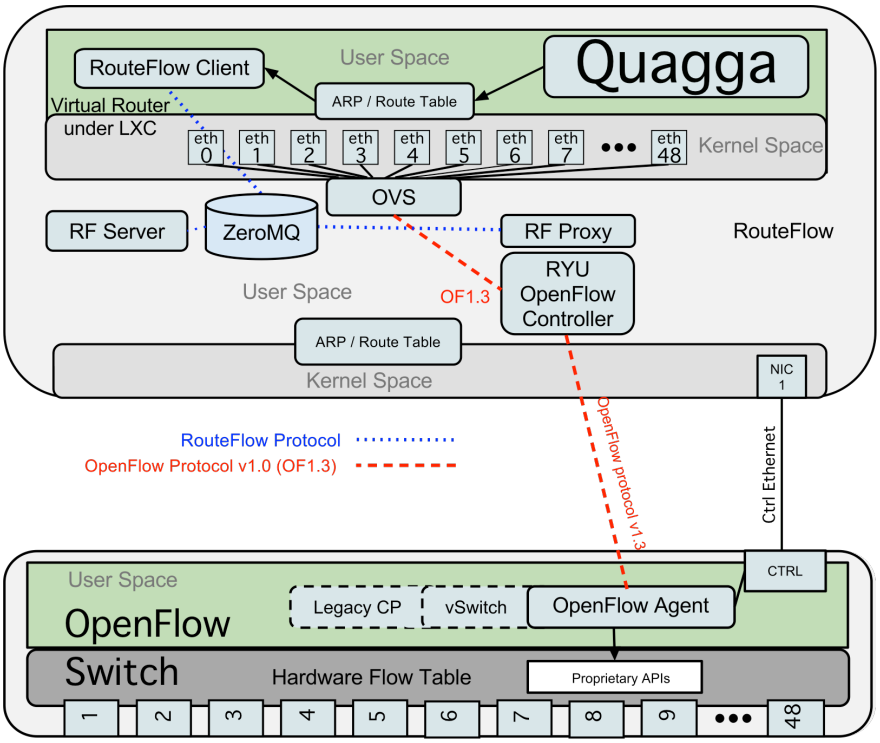

Quagga in distributed platform

Demonstration of a high-end distributed router with **Quagga** handling the routing protocols on the Route Processor (here a Virtual Machine inside the OpenFlow System) and controlling the forwarding table of line cards or switches (here demonstrated with an OpenFlow switch)

Equipment and Software used

Pica8 P-3290 OpenFlow (v1.3) switch, running PicOS 2.1
Generic SuperMicro Server, running Ubuntu 12.0.4LTS, with the RYU OpenFlow controller, RouteFlow Client and Quagga 0.99.22.4 in a virtual machine. Setup based on the Vandervecken Live CD Distribution.

Pica8 P-3290
PicOS 2.1 (supporting OpenFlow 1.3) in OVS Mode.

Vandervecken
Vandervecken is distributed as a Live CD to demonstrate OpenFlow with Quagga. Current versions require OpenFlow 1.3 capable switch and it is based on the RYU OpenFlow Controller software. The setup used an installed version of Vandervecken with the virtual demo hosts replaced by physical hosts and routers connected to the switch
http://www.vandervecken.com/vandervecken.iso

Quagga as software router

Demonstration of Quagga in a setup of a software router using linux for forwarding. Similar software configuration could be used to utilize Quagga as a virtual router in a virtual environment.

Equipment and Software used

Soekris net5501 running Debian 7.1 and using Quagga 0.99.22.4

Soekris net5501
Soekris are generic low-end PCs configured for network appliances. The Soekris was choosen for it's low power consumption, multiple ethernet interfaces and small form factor.
Any other PC could be equally used based on the required performance.
http://soekris.com/products/net5501.html

Commercial router

Cisco 1841
Cisco 1841 router with an extra switch module HWIC-ESW4 and running IOS 12.4(11)T4 to demonstrate the interopability

Host Simulator/Tester

pihost
RaspberryPi with touchscreen to monitor the connectivity to the other simulated hosts on the network. Developed by NetDEF for simple network testing and demonstration. Open Source

Contact us for more details

Everything here (except the off-the-shelf router and the OpenFlow Switch) is based on open source. We are happy to share any information regarding this setup and the exact configurations used.

More Info:

www.opensourcerouting.org
info@opensourcerouting.org

www.opensourcerouting.org